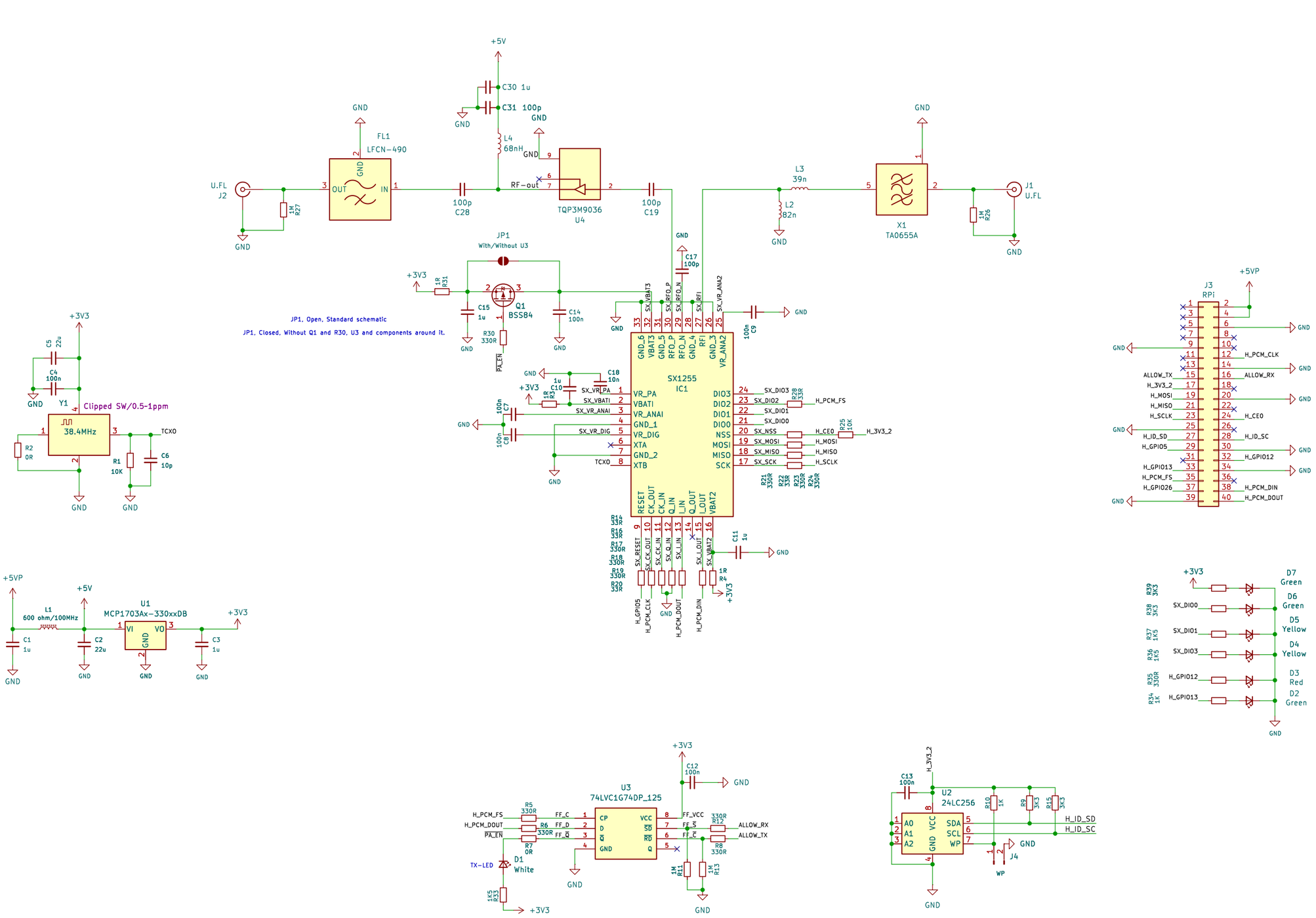


Modified SXceiver

**Z32IT**

Sheet: /

File: HAT with RX-BPF_TX-LFP.kicad_sch

***Title: HAT with LowPass & BandPass filters***

| | | |
|---|---|---|
| Size: A3 | Date: 2026-03-23 | **Rev: V1.0** |
| KiCad E.D.A. 9.0.7 | | Id: 1/1 |